STV-2S

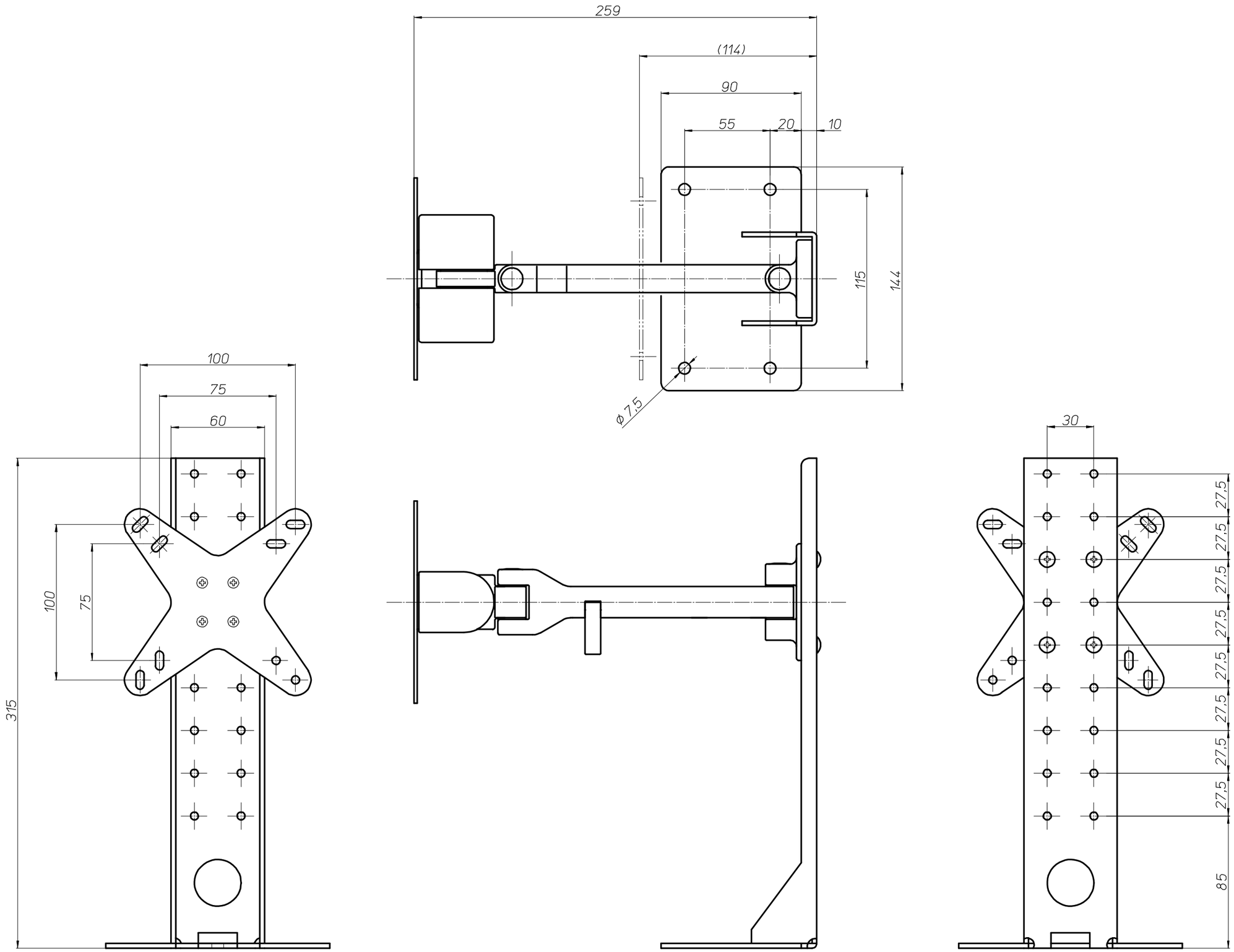
259
(114)
90
55
20
10
115
144
ø7.5
100
75
60
100
75
315
30
27.5
27.5
27.5
27.5
27.5
27.5
27.5
27.5
85